230V~ 50Hz / E27 Max.60W
in-line on/off switch + black textile wire
Finish: matt black + walnut wood

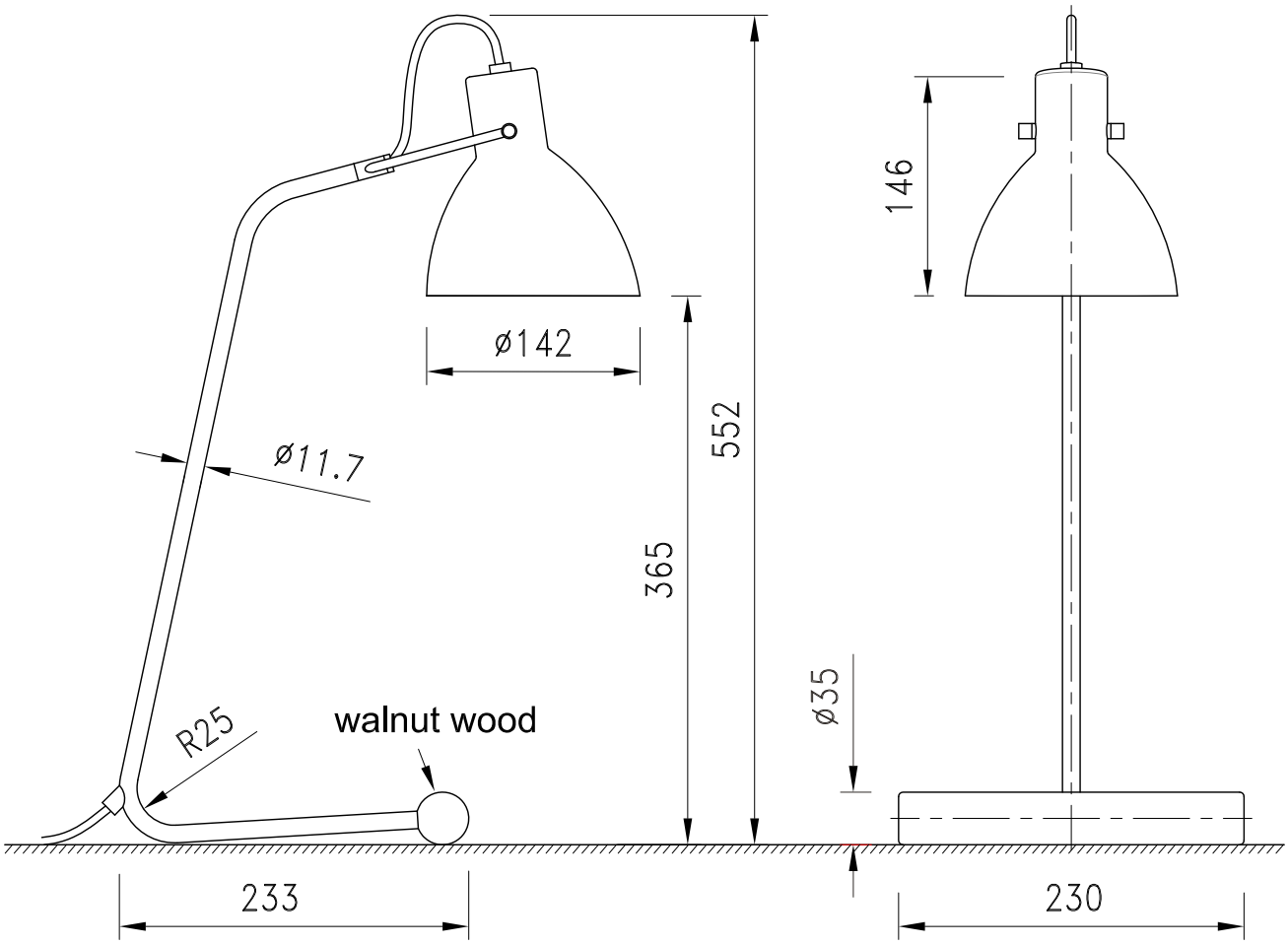

aromas

AITO

Scale: 1:5

MEASURES IN MM

S1270

Drawing: 1.1

Date: 20 / 10 / 2017