SPEC SHEET

Studio Floor Lamp
Item # TOB 1010BZ-NP-EU

Designer: Thomas O'Brien

Height: 135.9 - 210.9cm
Width: 71.2cm
Base: 24.2cm x 87.7cm Tripod
Finishes: BZ, HAB, PN
Shade Treatments: NP
Shade Details: 63.5cm x 71.2cm x 55.9cm
Socket: 2 - E27
Wattage: 60 A
IP Rating: IP20

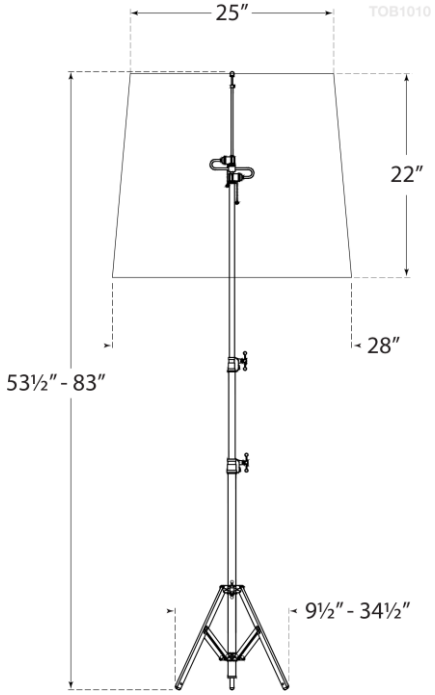

CE CB

VISUAL COMFORT & CO. Est. 1987