SPEC SHEET

Octagonal Spire Large Table Lamp
Item # CHA 8951CG-NP-EU

Designer: E. F. Chapman

Height: 80.1cm
Width: 43.2cm
Base: 11.5cm Octagon
Finishes: CG
Shade Treatments: NP
Shade Details: 33.1cm x 43.2cm x 25.4cm
Socket: E27
Wattage: 100 A
IP Rating: IP20
Note: French Wired
©EFC DESIGNS

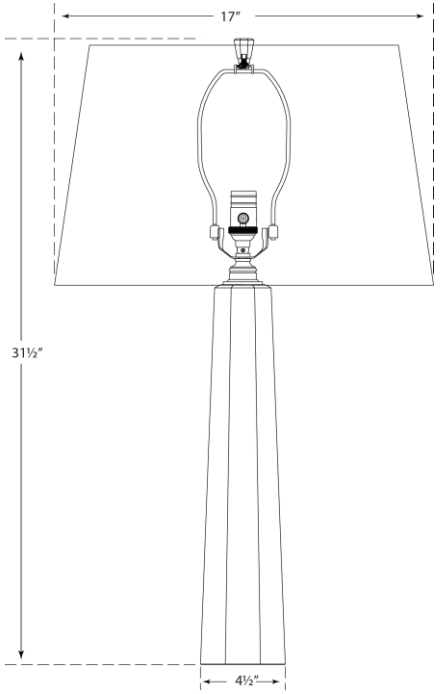

CE CB

VISUAL COMFORT & CO. Est. 1987