SPEC SHEET

Country Small Chandelier

Item # S 5211BW-EU

Designer: Studio VC

Height: 68cm
Width: 92.8cm
Canopy: 14cm Round
Finishes: BW
Socket: 6 - E14
Wattage: 60 C
IP Rating: IP20

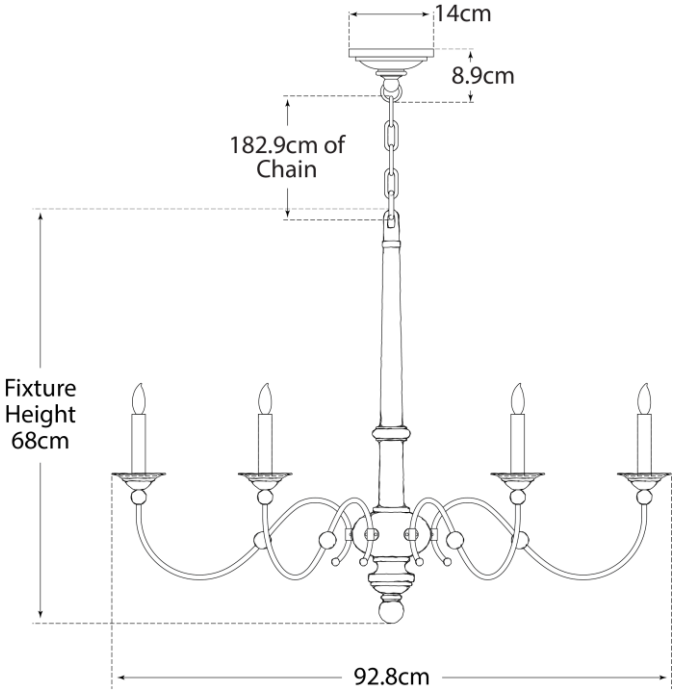

CE CB

VISUAL COMFORT & CO. Est. 1987